ISSUE	MOD No.	REASON - INITIAL - DATE
A		DRAWING CREATED FROM SK0450 RSR 03-02-20
B		OPTIONAL TAG REMOVED LABEL NOTES ADDED MM 31-07-2023
C		Changed to bottom entries configuration. MM 11:11:2024

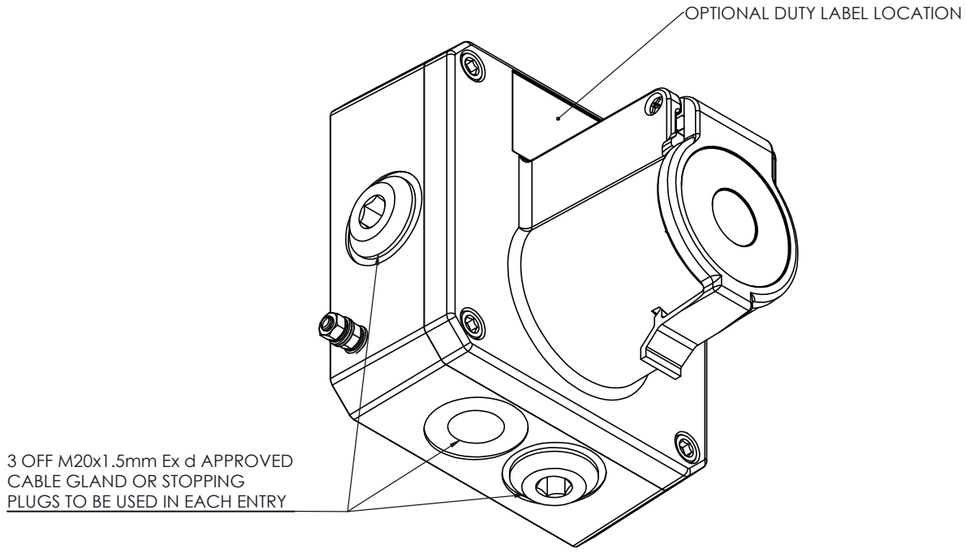

SHOWN WITH LID CLOSED

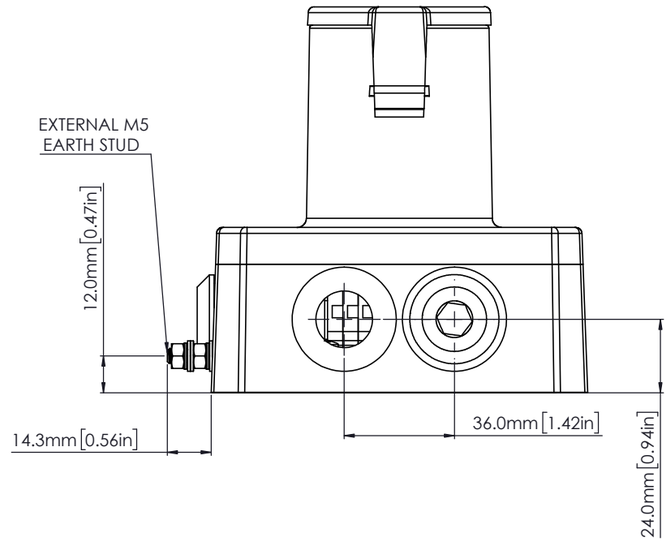

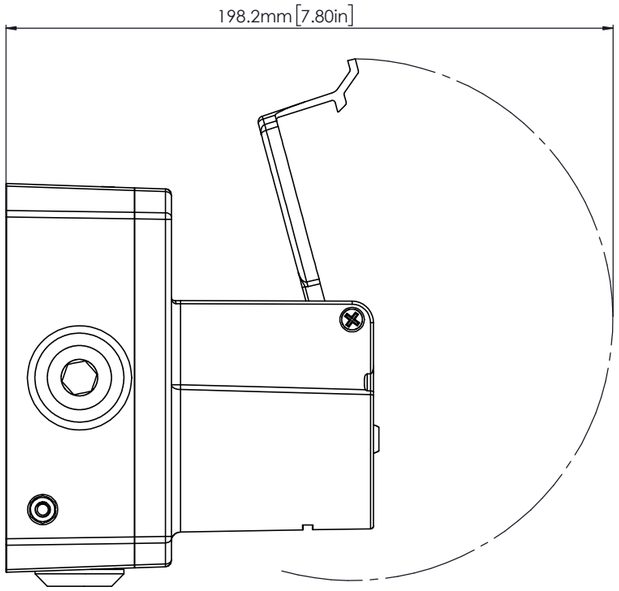

SHOWN WITH LID OPEN

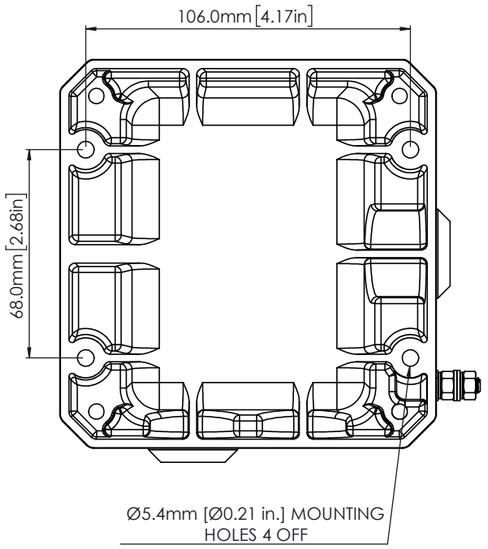

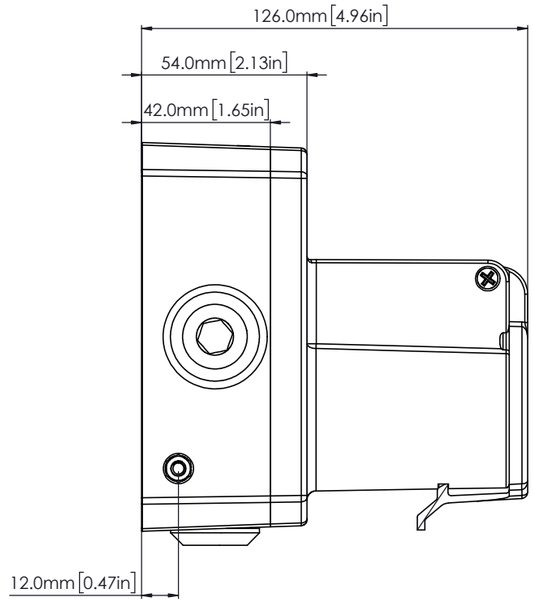

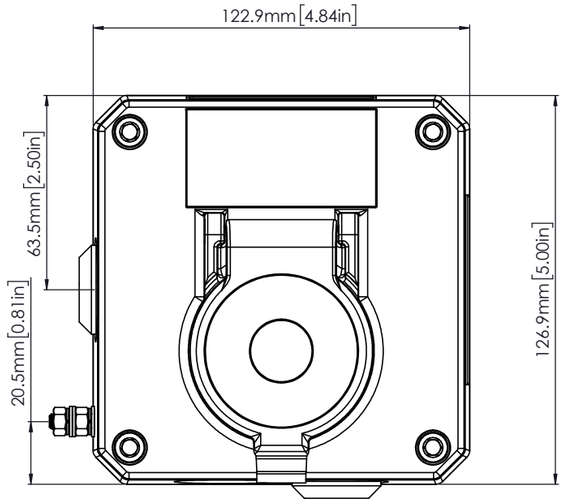

E2S PART No.	DESCRIPTION	DATA REFERENCE
STExCP8-PM...	STAINLESS STEEL CP8 PUSH BUTTON (MOMENTARY) CALL POINT	1.24.130
STExCP8-PT...	STAINLESS STEEL CP8 PUSH BUTTON (TOOL RESET) CALL POINT	1.24.130

NOTES :

FOR OPTIONAL DUTY LABEL SEE DRAWING D254-00-011
FOR OPTIONAL TAG PLATE SEE DRAWING D254-00-111

DRAWING TO BS8888:2000 GEOMETRIC TOLERANCES TO ISO1101:1983 LINEAR DIMENSIONAL TOLS ANGULAR DIMENSIONAL TOLS	DRAWN R.S.RAIT	DATE 24-10-16	SURFACE FINISH	WEIGHT (Kg)
	CHECKED B.ISARD	DATE 24-10-16	MATERIAL	
STANDARDS PRODUCT REF	APPROVED R.N.POTTS	DATE 24-10-16	ALTERNATIVE MATERIAL	

THIS DRAWING AND ANY INFORMATION OR DESCRIPTIVE MATTER THEREIN IS COMMUNICATED IN CONFIDENCE AND IS THE COPYRIGHT PROPERTY OF EUROPEAN SAFETY SYSTEMS LTD. NEITHER THE WHOLE OR ANY EXTRACT MAY BE DISCLOSED, LOANED, COPIED OR USED FOR MANUFACTURING OR TENDERING PURPOSES WITHOUT THEIR WRITTEN CONSENT.

© EUROPEAN SAFETY SYSTEMS LTD.
AS PER LATEST DATE OF ISSUE SHOWN ABOVE

e2S warning signals
EUROPEAN SAFETY SYSTEMS LTD
IMPRESS HOUSE
MANSELL ROAD
ACTON
LONDON W3 7QH
WWW.E2S.COM

ALL DIMENSIONS IN MM
IF IN DOUBT, ASK - DO NOT SCALE

A1

TITLE: STExCP8-PM/PT PUSH BUTTON MOMENTARY/ TOOL RESET OUTLINE DRAWING

SCALE	SHEET	DRAWING NUMBER
1:1	1 OF 1	D204-05-211